AN-1829 LP38502ASD-ADJ Evaluation Board

1 Introduction

The LP38502ASD-ADJ is a 1.5A low-dropout (LDO) linear regulator in the LLP-8 package that has an adjustable output voltage (set by external resistors).

2 Basic Application Circuit

The basic application circuit that is built up on the evaluation board is shown in Figure 1.

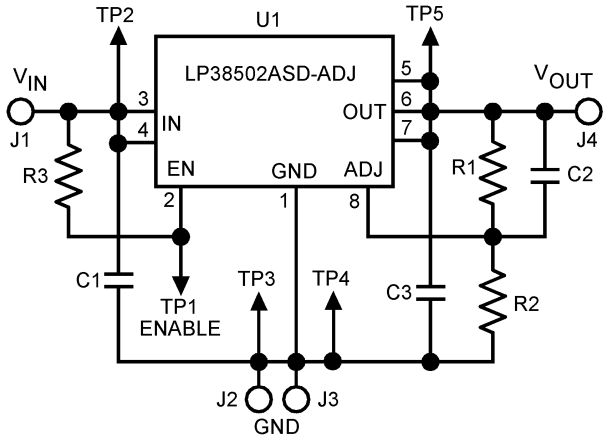

Figure 1. Basic Application Circuit

3 Changing the Output Voltage

The resistors R1 and R2 set the output voltage. Equation 1 determines output voltage:

$$V_{OUT} = V_{ADJ} \times (1 + R1/R2) \quad (1)$$

where V_{ADJ} is typically 0.6 V.

The board has installed values of:

R1 = 19.1 kΩ

R2 = 6.04 kΩ

which sets the output to 2.5 V.

R1 can be adjusted to change the nominal output voltage to other values. The minimum output voltage that can be set is the ADJ pin voltage, which is approximately 0.6 V. This is obtained by installing a jumper or low value resistor (less than 10 Ω) at R1. The maximum usable output voltage is limited by the maximum input voltage, which is 5.5 V. Since rated dropout voltage at full current is 0.375 V, this means the maximum usable output voltage for full current operation is about 5.1 V.

All trademarks are the property of their respective owners.

Copyright © 2008–2013, Texas Instruments Incorporated

4 Feedforward Capacitor C2

The PCB layout includes a location for C2, which is a feedforward capacitor connected across R1. If the data sheet guidelines are followed, and R2 does not exceed 10 kΩ, C2 is not required and has no effect on performance. The internal compensation is such that an internal zero provides more than adequate phase margin so external compensation is never needed.

However, if the value of R2 is increased above 10 kΩ, the effect of the internal zero gradually diminishes and the phase margin is reduced. At an R2 value of approximately 50 kΩ, the phase margin will be low enough that instability may occur. In such cases, some of the lost phase margin can be regained by placing a capacitor at C2. Although it is sometimes possible to regain adequate phase margin this way, it is recommended that the data sheet guidelines be followed and R2 not exceed 10 kΩ (so C2 is never required).

5 Power Dissipation

The power dissipated within the regulator IC is given by:

$$P_D = I_L (V_{IN} - V_{OUT}) \quad (2)$$

Where:

P_D is the power dissipated in the IC regulator U1.

I_L is the load current.

V_{IN} is the value of V_{IN} measured at TP2 (not at J1).

V_{OUT} is the value of V_{OUT} measured at TP5 (not at J4).

The thermal resistance of U1 from junction to ambient can be assumed to be approximately 80°C/W for this assembly. That means that the junction temperature will rise about 80°C above ambient for each Watt of power dissipated within the IC.

The parametric specifications of the IC are for a maximum junction temperature of 125°C, and the maximum allowable junction temperature is 150°C. This limits maximum usable power dissipation for this package to approximately 1.5W. If power dissipation exceeds this (and the junction temperature approaches 150°C), the part may go into thermal shutdown.

Copyright © 2008–2013, Texas Instruments Incorporated

6 PCB Component Layout

The components listed in the basic application circuit can be identified using the silkscreen on the top layer of the PCB (see Figure 2).

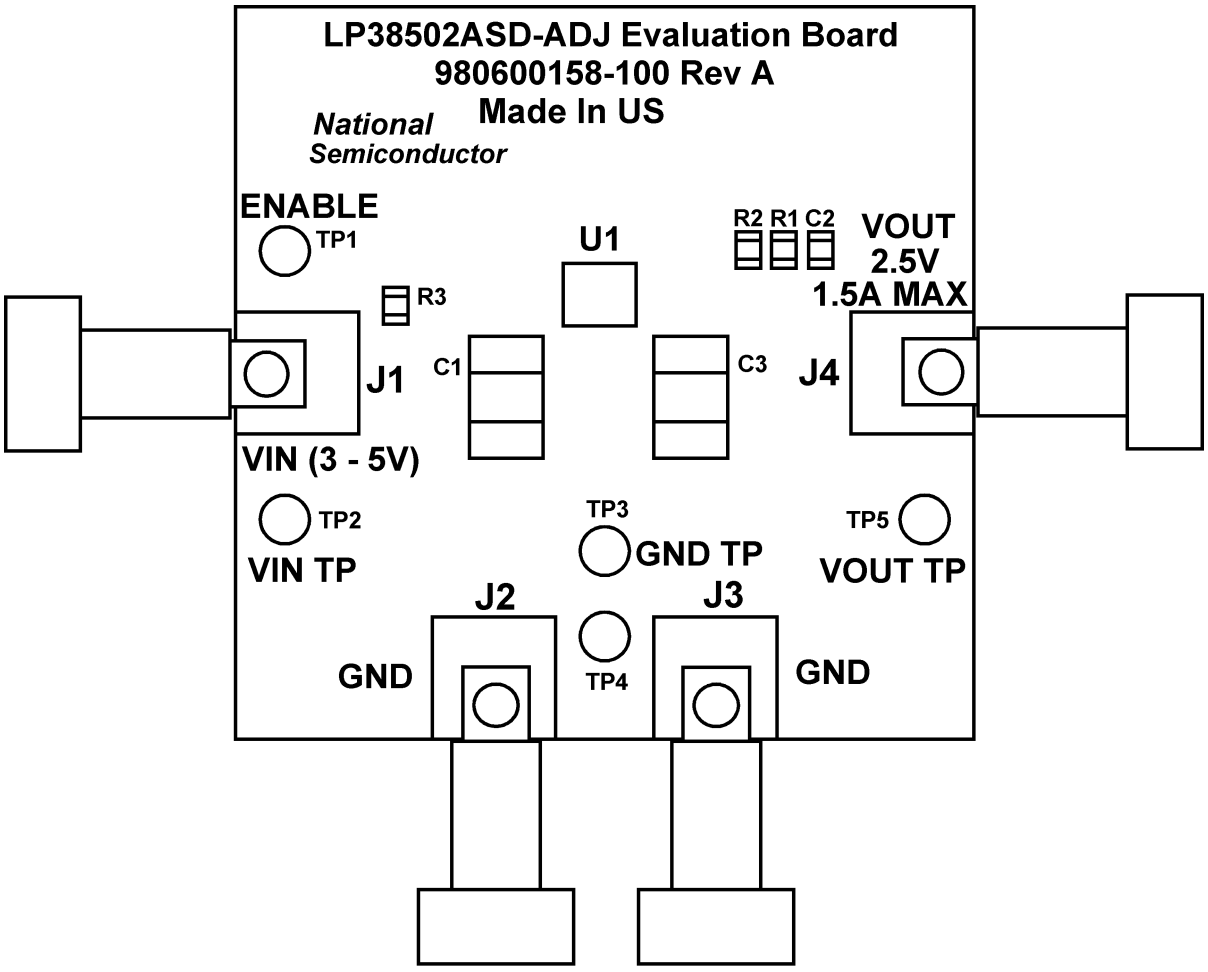

Figure 2. Top View of the PCB Assembly

Copyright © 2008–2013, Texas Instruments Incorporated

7 Bill of Materials (BOM)

The initial evaluation boards were built up for a 2.5 V regulated output. The components used in the PCB assembly are listed in Table 1.

Table 1. Bill of Materials (BOM)

Qty.	Designator	Description	Part Number
1	PCB	PC board	551600158-001
1	R1	Resistor, 19.1 kΩ, 1%	Vishay CRCW08051912F
1	R2	Resistor, 6.04 kΩ, 1%	Vishay CRCW08056041F
1	R3	Resistor, 51.1 kΩ, 1%	Vishay CRCW08055112F
1	J1	Red Banana Jack	Digi-Key J-151-ND
2	J2,J3	Black Banana Jack	Digi-Key J-152-ND
1	J4	Blue Banana Jack	Digi-Key J-155-ND
2	C1,C3	Cap, CER, 10 µF	Digi-Key PCC2225CT-ND
5	TP1-TP5	Test Points	Newark 160-2043-02-01-00
1	U1	IC, LP38502	LP38502
	C2	****NOT INSTALLED FOR THIS ASSEMBLY	

Copyright © 2008–2013, Texas Instruments Incorporated

IMPORTANT NOTICE

Texas Instruments Incorporated and its subsidiaries (TI) reserve the right to make corrections, enhancements, improvements and other changes to its semiconductor products and services per JESD46, latest issue, and to discontinue any product or service per JESD48, latest issue. Buyers should obtain the latest relevant information before placing orders and should verify that such information is current and complete. All semiconductor products (also referred to herein as “components”) are sold subject to TI’s terms and conditions of sale supplied at the time of order acknowledgment.

TI warrants performance of its components to the specifications applicable at the time of sale, in accordance with the warranty in TI’s terms and conditions of sale of semiconductor products. Testing and other quality control techniques are used to the extent TI deems necessary to support this warranty. Except where mandated by applicable law, testing of all parameters of each component is not necessarily performed.

TI assumes no liability for applications assistance or the design of Buyers’ products. Buyers are responsible for their products and applications using TI components. To minimize the risks associated with Buyers’ products and applications, Buyers should provide adequate design and operating safeguards.

TI does not warrant or represent that any license, either express or implied, is granted under any patent right, copyright, mask work right, or other intellectual property right relating to any combination, machine, or process in which TI components or services are used. Information published by TI regarding third-party products or services does not constitute a license to use such products or services or a warranty or endorsement thereof. Use of such information may require a license from a third party under the patents or other intellectual property of the third party, or a license from TI under the patents or other intellectual property of TI.

Reproduction of significant portions of TI information in TI data books or data sheets is permissible only if reproduction is without alteration and is accompanied by all associated warranties, conditions, limitations, and notices. TI is not responsible or liable for such altered documentation. Information of third parties may be subject to additional restrictions.

Resale of TI components or services with statements different from or beyond the parameters stated by TI for that component or service voids all express and any implied warranties for the associated TI component or service and is an unfair and deceptive business practice. TI is not responsible or liable for any such statements.

Buyer acknowledges and agrees that it is solely responsible for compliance with all legal, regulatory and safety-related requirements concerning its products, and any use of TI components in its applications, notwithstanding any applications-related information or support that may be provided by TI. Buyer represents and agrees that it has all the necessary expertise to create and implement safeguards which anticipate dangerous consequences of failures, monitor failures and their consequences, lessen the likelihood of failures that might cause harm and take appropriate remedial actions. Buyer will fully indemnify TI and its representatives against any damages arising out of the use of any TI components in safety-critical applications.

In some cases, TI components may be promoted specifically to facilitate safety-related applications. With such components, TI’s goal is to help enable customers to design and create their own end-product solutions that meet applicable functional safety standards and requirements. Nonetheless, such components are subject to these terms.

No TI components are authorized for use in FDA Class III (or similar life-critical medical equipment) unless authorized officers of the parties have executed a special agreement specifically governing such use.

Only those TI components which TI has specifically designated as military grade or “enhanced plastic” are designed and intended for use in military/aerospace applications or environments. Buyer acknowledges and agrees that any military or aerospace use of TI components which have ***not*** been so designated is solely at the Buyer's risk, and that Buyer is solely responsible for compliance with all legal and regulatory requirements in connection with such use.

TI has specifically designated certain components as meeting ISO/TS16949 requirements, mainly for automotive use. In any case of use of non-designated products, TI will not be responsible for any failure to meet ISO/TS16949.

Products		**Applications**	
Audio	www.ti.com/audio	Automotive and Transportation	www.ti.com/automotive
Amplifiers	amplifier.ti.com	Communications and Telecom	www.ti.com/communications
Data Converters	dataconverter.ti.com	Computers and Peripherals	www.ti.com/computers
DLP® Products	www.dlp.com	Consumer Electronics	www.ti.com/consumer-apps
DSP	dsp.ti.com	Energy and Lighting	www.ti.com/energy
Clocks and Timers	www.ti.com/clocks	Industrial	www.ti.com/industrial
Interface	interface.ti.com	Medical	www.ti.com/medical
Logic	logic.ti.com	Security	www.ti.com/security
Power Mgmt	power.ti.com	Space, Avionics and Defense	www.ti.com/space-avionics-defense
Microcontrollers	microcontroller.ti.com	Video and Imaging	www.ti.com/video
RFID	www.ti-rfid.com		
OMAP Applications Processors	www.ti.com/omap	**TI E2E Community**	e2e.ti.com
Wireless Connectivity	www.ti.com/wirelessconnectivity		

Mailing Address: Texas Instruments, Post Office Box 655303, Dallas, Texas 75265
Copyright © 2013, Texas Instruments Incorporated